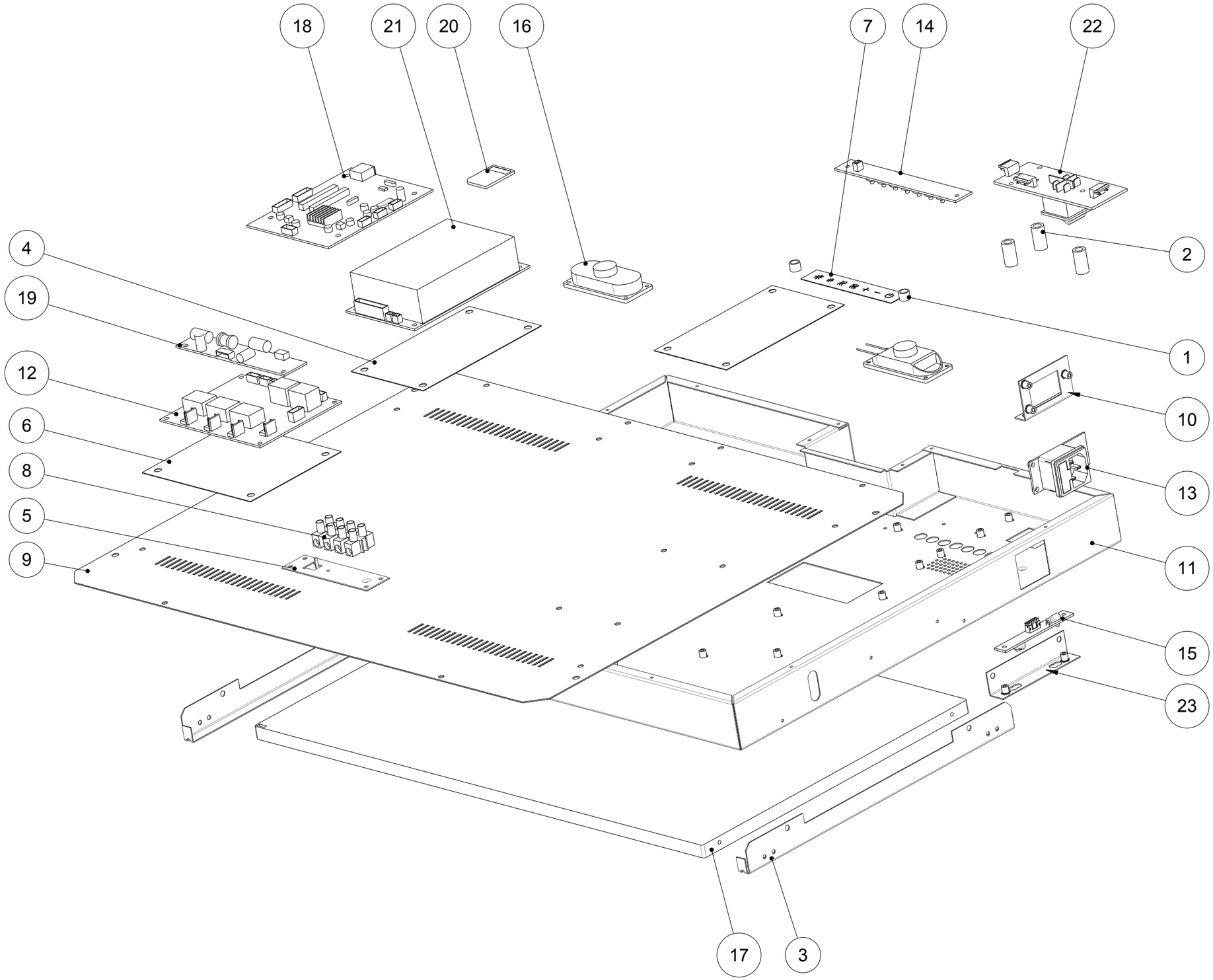

NO.	PART NO.	DESCRIPTION	QTY
1	1/70521/0	FRET SPACER	2
2	1/73160/0	8mm SPACER	3
3	1/73463/0	Screen Fixing Bracket	2
4	1/73497/0	PSU Insulator	2
5	1/73500/0	Terminal Block Mounting Plate	1
6	1/73765/0	Relay Board Insulator	1
7	1/81330/0	DECAL	1
8	2/16687/1	4 way T-Block	1
9	21/73461/0	Back Panel	1
10	21/73496/0	AC Bracket assy	1
11	22/62431/0	Front Weld Assembly - Single	1
12	3/23274/1	Relay Board	1
13	3/23275/0	AC Board	1
14	3/23276/0	OSD Board (7)	1
15	3/23277/0	IR Board	1
16	3/23278/0	2 x Speaker Assembly	1
17	3/23279/0	AU LCD Panel	1
18	3/23280/2	Media Board with Logo	1
19	3/23281/0	Backlight Driver Board	1
20	3/23282/3	SD Card _PGF10	1
21	3/23283/0	125W PSU	1
22	3/23424/0	Switch Board	1
23	31/73475/0	IR bracket Nut assy - Ptd.	1

GLEN DIMPLEX RESEARCH & DEVELOPMENT
Dunleer, Co.Louth, Ireland. Tel: ++353(0)41 6872200. Fax: ++353(0)41 6851464.

THIS DRAWING IS SUPPLIED IN CONFIDENCE AND THE COPYRIGHT THEREOF IS THE PROPERTY OF GLEN DIMPLEX : IT MUST NOT BE USED BY A THIRD PARTY WITHOUT PRIOR PERMISSION. ©2017

DRAWN BY	CL	A3	TITLE Screen Assembly - V215-S
SERIES	---		
SERIES DATE	---		
ISSUE	2		DRG NO 4/19377/0
PROJECT	Opti-V		

THIS DRAWING IS NOT UNDER QC CONTROL

OCN	10693	10829																
DATE	8/08/17	24/11/17																